CHANGE ORDER

Change Order 7

Date of Issuance:	August 29, 2019	Effective Date:	August 29, 2019
Owner:	City of Fort Bragg	Owner's Contract No.:	2018-01
Contractor:	Wahlund Construction Inc.	Contractor's Project No.:	
Engineer:	HDR	Engineer's Project No.:	260093
Project:	WWTP Upgrade Project	Contract Name:	

The Contract is modified as follows upon execution of this Change Order:

Description: Change in Contract Price as itemized in Exhibit A

Attachments: *[List documents supporting change]* See Exhibit A

CHANGE IN CONTRACT PRICE	CHANGE IN CONTRACT TIMES ***[note changes in Milestones if applicable]***
Original Contract Price: $ 15,352,500.00	Original Contract Times: Substantial Completion: 7/22/20 Ready for Final Payment: 9/22/20 days or dates
[Increase] [Decrease] from previous approved Change Orders No. 1 to No. 6: $ 230,161.79	[Increase] [Decrease] from previous approved Change Orders No. 1 to No. 6: Substantial Completion: 2 Ready for Final Payment: 2 days
Contract Price prior to this Change Order: $ 15,122,338.21	Contract Times prior to this Change Order: Substantial Completion: 7/24/20 Ready for Final Payment: 9/24/20 days or dates
[Increase] [Decrease] of this Change Order: $ 144,028.34	[Increase] [Decrease] of this Change Order: Substantial Completion: Ready for Final Payment: days or dates
Contract Price incorporating this Change Order: $ 15,266,366.55	Contract Times with all approved Change Orders: Substantial Completion: 7/24/20 Ready for Final Payment: 9/24/20 days or dates

RECOMMENDED:	ACCEPTED:	ACCEPTED:
By:	By:	By:
Engineer (if required)	Owner (Authorized Signature)	Contractor (Authorized Signature)
Title:	Title:	Title:
Date:	Date	Date

Approved by Funding Agency (if applicable)

By: Date:

Title:

WAHLUND CONSTRUCTION, INC.
830 Hilma Drive
Eureka, CA 95503
Phone: (707) 268-0150
Fax: (707) 268-0137

Change Order Request

C.O.R. Number:	**009**
Date:	8/27/2019
Requested by:	Fort Bragg

Issued To:

City of Fort Bragg
416 North Franklin Street
Fort Bragg, CA 95437

Project: Wastewater Treatment Plant Upgrades

Description	Amount
Outfall pipe cleaning and Tideflex valve installation per Underwater Resources Inc Estimate No: 190802 dated 8/2/19.	$ 135,811.73

Sub Total	$ 135,811.73
5% O&P	$ 6,790.59
Sub Total	$ 142,602.32
1% Bond	$ 1,426.02
Total Price	$ 144,028.34

Additional working days required: 0

Attachments:

Underwater Resources Inc Estimate No: 190802 dated 8/2/19

Signed: Bret Rinehart

Wahlund Construction, Inc.

"The undersigned Contractor certifies under penalty of perjury that its statements and representations in this Change Order request are true and correct. Contractor warrants that this Change Order request is comprehensive and complete, and agrees that any costs, expenses, or time extension request not included herein shall be deemed waived. Contractor understands that submission of claims that have no basis in fact or that Contractor knows to be false may violate the False Claims Act, as set forth in Government Code Sections 12650 et seq."

866 Estabrook St., San Leandro, CA
415.974.5464 Fax 510.957.5018
www.urdiving.com

ESTIMATE

Customer: City of Fort Bragg
Address: 416 N. Franklin Street
Fort Bragg, CA 95437
Attn: John Smith

Estimate No.: 190802
Estimate Date: 2-Aug-19

Job Title: Core Drill Diffuser Section

JOB DESCRIPTION:

Task 1: URI will mobilize a three-person dive crew along with shallow air equipment and a dive utility vessel to the Fort Bragg Municipal Utilities District Outfall. The crew will core drill 12-inch holes through the concrete encasement and the top of the pipe according to plans developed by the District and URI (sample attached). The crew will then use pumps and other means to clean the diffuser section between port 10 and the end gate through the core drilled holes. Material will be diffused and sidecast. Once the diffuser section is cleaned, the holes will be reinforced with marine epoxy, plugged at the crown of the pipe with a 316SS rubber plumber type plug, filled with concrete, then restrained with a 316SS strut channel.

Task 2: URI will remove all existing (14) flap valves from the outfall diffuser section. Once the flaps are removed, the divers will drill two (2) new holes in the aluminum bronze plates according to the attached drawing and install new TideFlex valves using 316 SS nuts, bolts and washers. New TideFlex valves are to be purchased by URI at cost + 15%.

It is estimated that this work will require eight shifts to complete. URI will deliver a summary report to Fort Bragg along with a diver narrated inspection video of the completed work. **Pricing valid until 6/30/20**. URI requests that FBMID utilize a SCUBA diver to locate and place a temporary buoy on the outfall terminus prior to URI's arrival.

QTY.	Description	Unit	TOTAL
	Materials		
14.0	TideFlex Check Valves - Series 35SQW 3" + Freight at Cost + 15%	$ 3,403.08	$ 47,643.12
45.0	316L 3" Bolts (45) - 5/8-11 x 3" 316L SS	$ 17.50	$ 787.50
45.0	316L SS Nylock Nuts (45) - 5/8-11	$ 3.00	$ 135.00
90.0	316L SS Washers (80)	$ 1.50	$ 135.00
2.0	Concrete Plug w/lifting eye	$ 500.00	$ 1,000.00
2.0	316SS 12-Inch Plumber Type Plug (Custom Fabricated)	$ 1,200.00	$ 2,400.00
1.0	Lump Cost for Epoxy Coating for Cored Holes Interior	$ 1,000.00	$ 1,000.00
2.0	12-Inch Core Drill Bits	$ 1,013.02	$ 2,026.04
1.0	Custom Rolled Metal Drill Stand Plate	$ 200.00	$ 200.00
1.0	Box (20), Hilti Kwik Bolt TZ SS316 Wedge Anchors	$ 579.37	$ 579.37
2.0	Slotted 2-7/16" Strut Channel 316SS	$ 56.15	$ 112.31
	Equipment Mobilization		
8.0	Hours, Project Manager - Planning & Facilitate Crew & Equip. Mobilize	$ 135.00	$ 1,080.00
6.0	Hours, Shop Labor (3) - Assemble/Load Equipment in San Leandro, CA	$ 90.00	$ 540.00
12.0	Hours, URI Crew Travel (3) from San Leandro to Fort Bragg	$ 90.00	$ 1,080.00
1.0	Hours, Supervisor - Load Vessel	$ 165.50	$ 165.50
2.0	Hours, Pile Drivers (2) - Load Vessel	$ 145.75	$ 291.50
3.0	Per Diem (3) Crew Members	$ 200.00	$ 600.00
1.0	Day rate Charge - Crew Vehicle	$ 150.00	$ 150.00
177.0	Miles, 1-Way Travel from San Leandro-Fort Bragg	$ 0.535	$ 94.70
	Field Work - (5) Days - Core Drill (2) Holes, Clean Diffuser Section, Install Plugs		
5.0	Hours, Project Manager - Daily Logistics	$ 135.00	$ 675.00
5.0	ST Shift, Supervisor	$ 1,380.00	$ 6,900.00
10.0	ST Shift, (2) Divers	$ 2,015.00	$ 20,150.00
15.0	Per Diem (3) Crew Members	$ 200.00	$ 3,000.00
5.0	Day Rate, Charter Vessel	$ 1,500.00	$ 7,500.00
5.0	Day Rate, Shallow Air Diving System	$ 200.00	$ 1,000.00
5.0	Day Rate, Hot Water Unit	$ 100.00	$ 500.00
5.0	Day Rate, Hand Tools, Consumables and Parking	$ 150.00	$ 750.00
5.0	Day Rate, Venturi Dredge System	$ 300.00	$ 1,500.00
5.0	Day Rate, Pressure Washer with Pressurized Sewer Cleaner Head Attachment	$ 125.00	$ 625.00
5.0	Day Rate, Hydraulic Power Unit (HPU) - Diesel (16GPM)	$ 225.00	$ 1,125.00
5.0	Day Rate, Hydraulic Core Drill	$ 75.00	$ 375.00
5.0	Day Rate, Hydraulic Rock Drill	$ 75.00	$ 375.00
5.0	Day Rate, Float Bag	$ 75.00	$ 375.00
5.0	Day Rate, UW Closed-Circuit Video System + Generator	$ 300.00	$ 1,500.00
5.0	Day Rate, Crew Vehicle	$ 150.00	$ 750.00

866 Estabrook St., San Leandro, CA
415.974.5464 Fax 510.957.5018
www.urdiving.com

	Field Work - (3) Days - Remove Flap Valves, Drill Holes in Diffuser Plates, Install TideFlex Valves		
3.0	Hours, Project Manager - Daily Logistics	$ 135.00	$ 405.00
3.0	ST Shift, Supervisor	$ 1,380.00	$ 4,140.00
6.0	ST Shift, (2) Divers	$ 2,015.00	$ 12,090.00
9.0	Per Diem (3) Crew Members	$ 200.00	$ 1,800.00
3.0	Day Rate, Charter Vessel	$ 1,500.00	$ 4,500.00
3.0	Day Rate, Shallow Air Diving System	$ 200.00	$ 600.00
3.0	Day Rate, Hot Water Unit	$ 100.00	$ 300.00
3.0	Day Rate, Hand Tools, Consumables and Parking	$ 150.00	$ 450.00
3.0	Day Rate, Pressure Washer with Pressurized Sewer Cleaner Head Attachment	$ 125.00	$ 375.00
3.0	Day Rate, UW Closed-Circuit Video System + Generator	$ 300.00	$ 900.00
3.0	Day Rate, Crew Vehicle	$ 150.00	$ 450.00
	Demobilization		
4.0	Hours, Project Manager - Job Closeout & Report	$ 135.00	$ 540.00
4.0	Hours, Shop Labor (3) - Unload, Clean & Stow Equipment	$ 90.00	$ 360.00
12.0	Hours, URI Crew Travel (3) from Fort Bragg to San Leandro	$ 90.00	$ 1,080.00
1.0	Hours, Supervisor - Unload Vessel	$ 165.50	$ 165.50
2.0	Hours, Pile Drivers (2) - Unload Vessel	$ 145.75	$ 291.50
1.0	Day rate Charge - Crew Vehicle	$ 150.00	$ 150.00
177.0	Miles, 1-Way Travel from Fort Bragg to San Leandro	$ 0.535	$ 94.70
		Total:	**$135,811.73**

Aluminum Bronze Plate

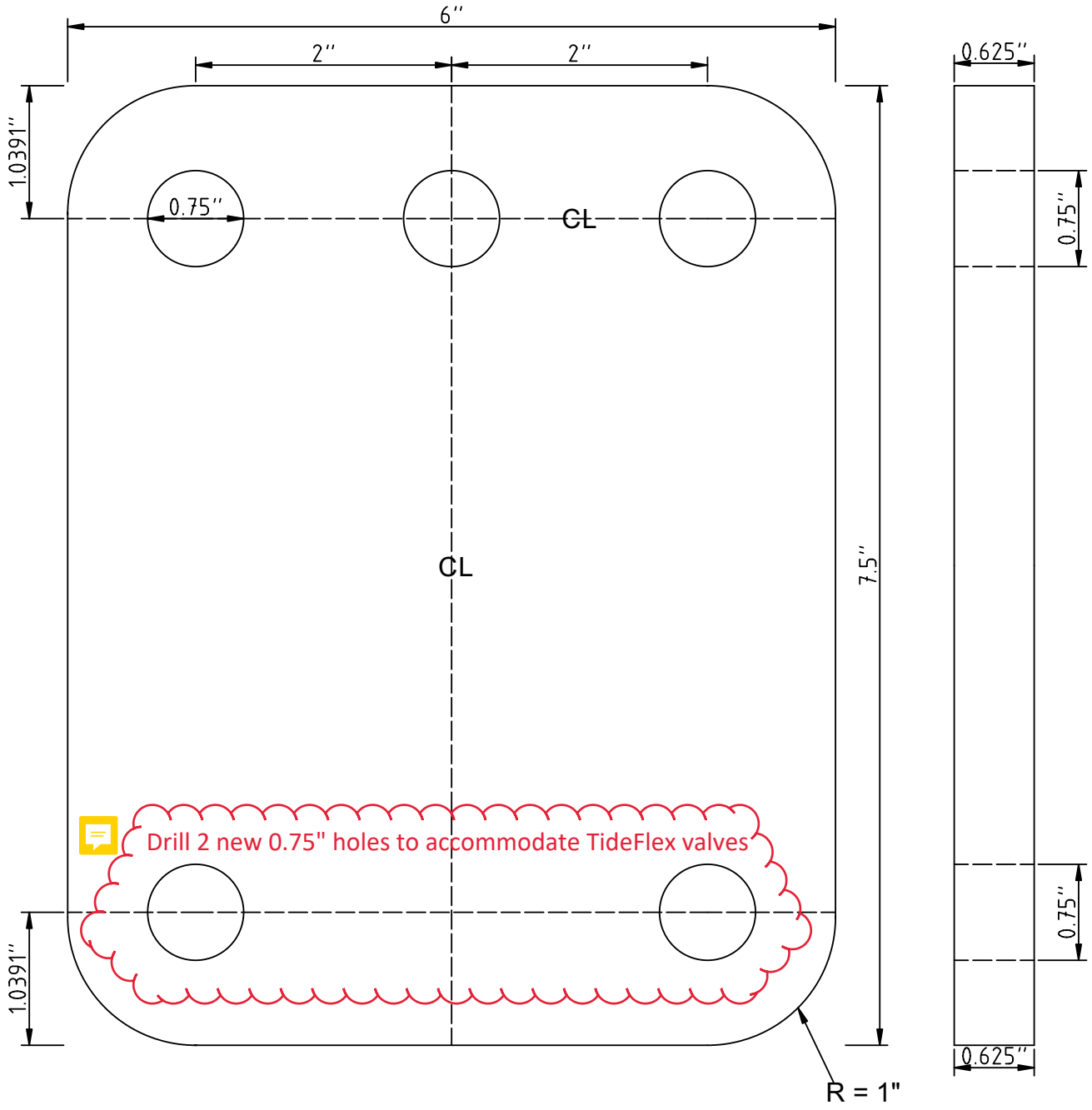

ITEM	QTY.	DESCRIPTION	MAT'L
1	1	WIDE BILL TIDEFLEX DIFFUSER	NEOPRENE
2	1	FLANGE BACK-UP RING (2-PIECE)	ALUMINUM BRONZE

NOTES:

1. MAXIMUM BACK PRESSURE: SEE HYDRAULIC CODE

ENTER 0 IF PRESSURE IN HEADER CANNOT DROP BELOW PRESSURE PRODUCED BY THE RECEIVING BODY OF WATER

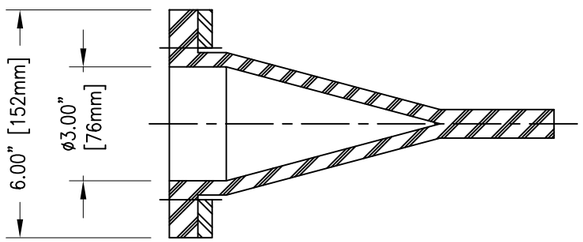

SECTION B-B

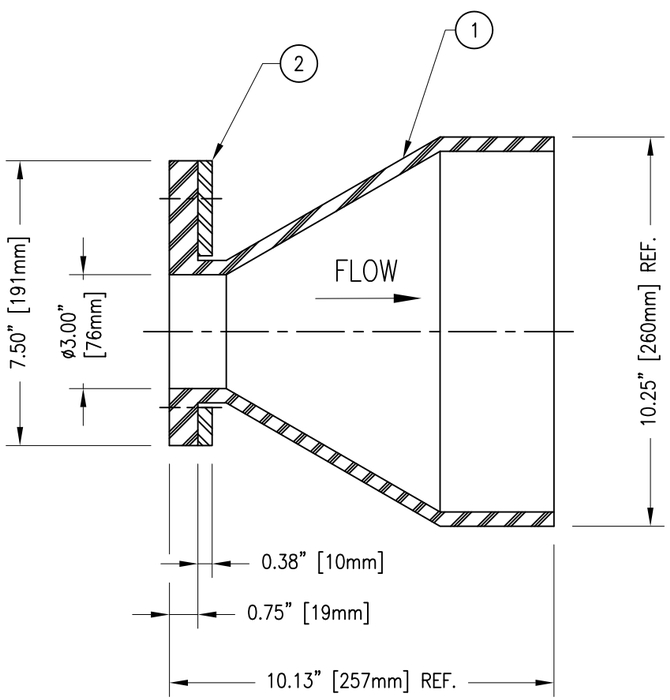

SECTION A-A

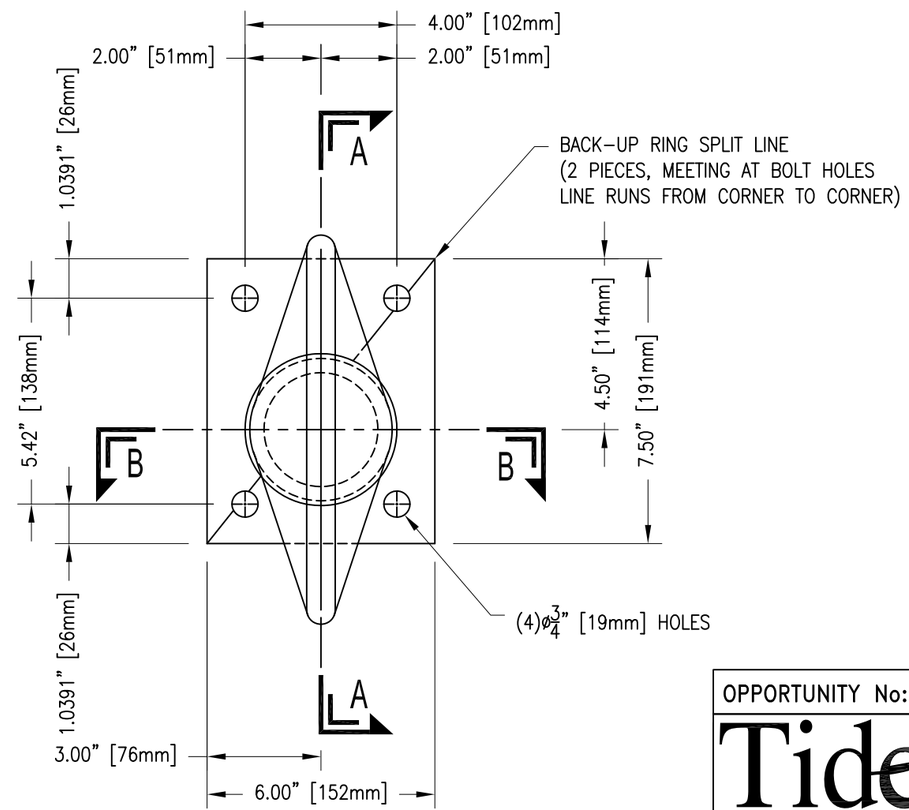

PROJECT: CITY OF FORT BRAGG
WWTP OUTFALL DIFFUSER
QUANTITY: 14
HYDRAULIC CODE No: 112

PRELIMINARY DRAWING
NOT FOR APPROVAL PURPOSES

OPPORTUNITY No: 68153 | SALES ORDER No:

Tideflex® Technologies
A Division of Red Valve Company, Inc.
600 N. BELL AVE.
CARNEGIE, PA. 15106
info@tideflex.com
412.279.0044
fax 412.279.5410

TT PRODUCT: 3" SERIES 35WSQ WIDE BILL W/ 7.5"x6" FLG.

TT PART No: 35WSQ-030-APPROVAL

DR. BY: RBS DATE: 5-8-19 | CHKD. BY: DATE:

CAD SCALE: FULL | REV

PLOT SCALE: 1 = 1 | DWG No: TTS-42941

CUSTOMER: CITY OF FORT BRAGG

ORDER No:

PROPRIETARY NOTICE

THIS DOCUMENT CONTAINS PROPRIETARY INFORMATION OF TIDEFLEX TECHNOLOGIES. IT IS LOANED BY TIDEFLEX TECHNOLOGIES, SUBJECT TO THE CONDITIONS THAT IT AND THE INFORMATION EMBODIED THEREIN SHALL BE USED ONLY FOR RECORD AND REFERENCE PURPOSES. IT SHALL NOT BE USED OR CAUSED TO BE USED IN ANY WAY PREJUDICIAL TO THE INTERESTS OF TIDEFLEX TECHNOLOGIES. IT SHALL NOT BE REPRODUCED OR COPIED IN WHOLE OR PART, OR DISCLOSED TO ANYONE WITHOUT THE DIRECT WRITTEN PERMISSION OF TIDEFLEX TECHNOLOGIES AND SHALL BE RETURNED UPON REQUEST.

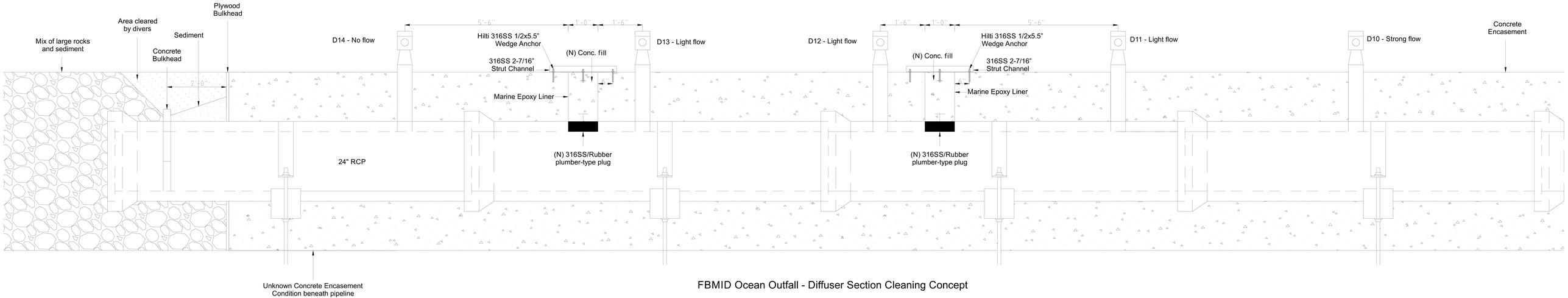

FBMID Ocean Outfall - Diffuser Section Cleaning Concept

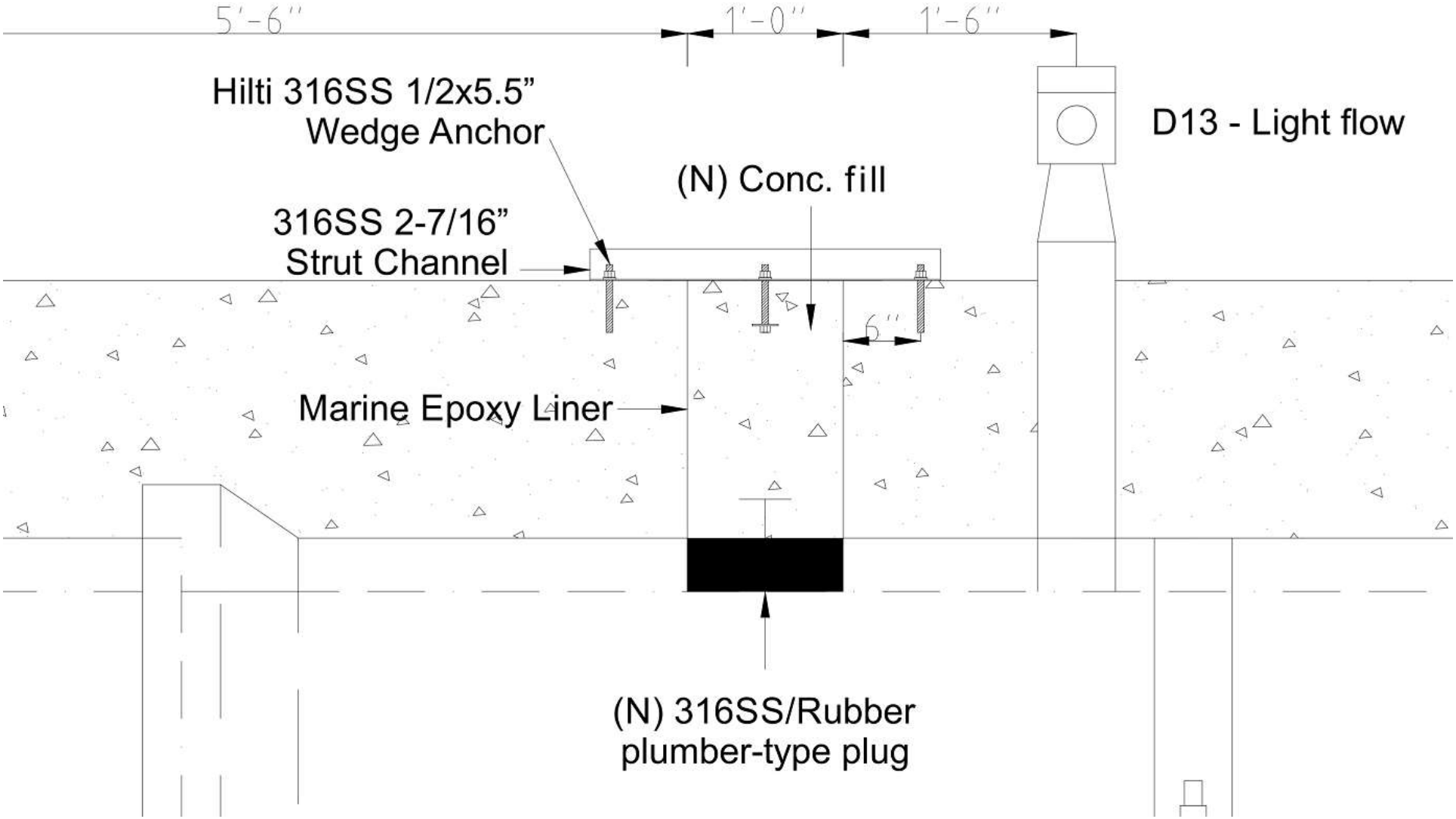
5'-6"
1'-0"
1'-6"
Hilti 316SS 1/2x5.5"
Wedge Anchor
D13 - Light flow
(N) Conc. fill
316SS 2-7/16"
Strut Channel
6"
Marine Epoxy Liner
(N) 316SS/Rubber
plumber-type plug